Name: Sheikh Wasimuddin
Branch: CSE-IOT
Roll No. : 73
Reg No. : 23071044

Practical - 01

Aim	To study Arduino UNO IoT kit with ATMega328 microcontroller.
Software used	Arduino UNO IDE
Hardware used	1. Arduino UNO 2. ATMega 328
Components required	1. Arduino UNO 2. ATMega 328 3. PC 4. Jumper wires
Circuit diagram	1. ATMega 328 Circuit Diagram 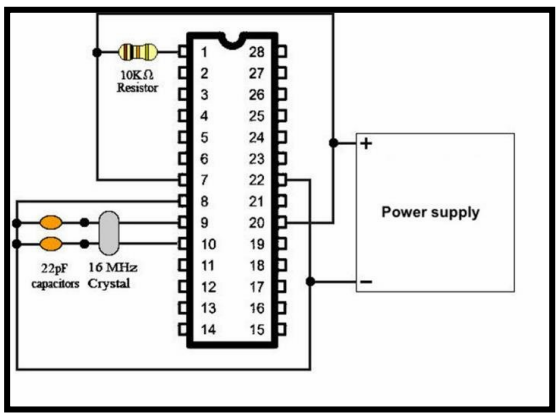 2. Arduino UNO Circuit Diagram 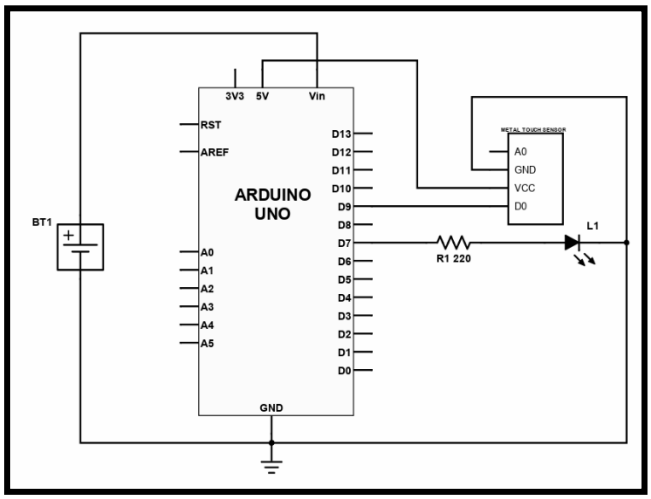
Theory	**1. The ATMega328 Microcontroller:** • **Core Function:** The ATMega328P is the heart of the Arduino UNO. It's a low-power 8-bit AVR microcontroller from Microchip Technology. Its primary role is to execute the program code you upload, control the input/output pins, and manage communication.

Name: Sheikh Wasimuddin
Branch: CSE-IOT
Roll No. : 73
Reg No. : 23071044

- **Key Features:**
  - **CPU:** 8-bit AVR CPU, capable of executing instructions.
  - **Memory:**
    - **Flash Memory (32 KB):** Stores the program code.
    - **SRAM (2 KB):** Used for temporary data storage during program execution.
    - **EEPROM (1 KB):** Non-volatile memory for storing data that needs to be retained even when the power is off.
  - **I/O Pins:** Digital and analog input/output pins for interacting with external components.
  - **Timers/Counters:** Used for generating precise timing signals, PWM (Pulse Width Modulation), and counting events.
  - **Serial Communication (UART), SPI, and I2C:** Enables communication with other devices.
  - **Analog-to-Digital Converter (ADC):** Converts analog voltage signals into digital values.

2. The Arduino UNO Board:

- **Purpose:** The Arduino UNO board provides a user-friendly platform for working with the ATMega328P. It simplifies programming and interfacing with external components.
- **Key Components:**
  - **ATMega328P Microcontroller:** The main processing unit.
  - **USB Interface:** Enables communication with a computer for programming and data transfer.
  - **Power Supply:** Accepts power from USB or an external power source.
  - **Voltage Regulator:** Provides a stable 5V and 3.3V power supply.
  - **Crystal Oscillator:** Provides a precise clock signal for the microcontroller.
  - **Reset Button:** Resets the microcontroller.
  - **I/O Pins:** Accessible through headers for connecting external components.
  - **LEDs:** For visual feedback (e.g., power LED, pin 13 LED).

3. Internet of Things (IoT) Integration:

- **IoT Fundamentals:** IoT involves connecting devices to the internet to collect and exchange data.
- **IoT Kit Components:** An Arduino UNO IoT kit typically includes:
  - **Wi-Fi Module (e.g., ESP8266 or ESP32):** Enables wireless communication with a Wi-Fi network.
  - **Sensors:** Collect data from the environment (e.g., temperature, humidity, light).
  - **Actuators:** Perform actions based on received data (e.g., LEDs, relays).
- **Communication Protocols:**
  - **Wi-Fi (802.11):** For wireless network connectivity.
  - **TCP/IP:** The fundamental communication protocol for the internet.
  - **MQTT (Message Queuing Telemetry Transport):** A lightweight messaging protocol for IoT applications.
  - **HTTP/HTTPS:** For web-based communication.
- **Cloud Platforms:**
  - IoT data is often sent to cloud platforms (e.g., Arduino IoT Cloud,

Name: Sheikh Wasimuddin
Branch: CSE-IOT
Roll No. : 73
Reg No. : 23071044

AWS IoT, Google Cloud IoT) for storage, processing, and visualization.
    - These platforms often provide features like data dashboards, remote control, and analytics.

4. Programming with Arduino IDE:

- **Arduino IDE (Integrated Development Environment):** A user-friendly software for writing and uploading code to the Arduino UNO.
- **Arduino Programming Language:** A simplified version of C/C++.
- **Libraries:** Pre-written code modules that simplify common tasks (e.g., Wi-Fi communication, sensor interfacing).
- **Sketch:** An Arduino program.
- **Compilation and Uploading:** The Arduino IDE compiles the sketch into machine code and uploads it to the ATMega328P.

5. Working with Sensors and Actuators:

- **Sensors:**
    - Understand the sensor's operating principles and how it measures the desired parameter.
    - Connect the sensor to the Arduino UNO's I/O pins.
    - Read sensor data using the Arduino's analog or digital input functions.
- **Actuators:**
    - Understand the actuator's operating voltage and current requirements.
    - Use the Arduino's digital output pins or PWM to control the actuator.
    - Use transistors or relays to switch higher-power actuators.

Key Learning Areas:

- **Microcontroller Fundamentals:** Understanding the architecture and operation of the ATMega328P.
- **Arduino Programming:** Learning the Arduino programming language and using the Arduino IDE.
- **Digital and Analog I/O:** Interfacing with sensors and actuators.
- **Serial Communication:** Using UART, SPI, and I2C.
- **Wi-Fi Communication:** Connecting to a Wi-Fi network and using communication protocols.

- **IoT Concepts:** Understanding IoT architecture, protocols, and cloud platforms.
- **Circuit Design:** Understanding basic electronics and circuit design principles.

By systematically studying these areas, you can gain a comprehensive understanding of Arduino UNO IoT kits and the ATMega328 microcontroller.

Output	To study Arduino UNO IoT kit with ATMega328 microcontroller performed successfully.